DRAWING FOR CUSTOMER

KB9314-X X H 3 A

Pin No.
Housing
Version
Mold No.

■SPEC.:
- ●Rated Voltage:250V AC,DC
- ●Rated Current:2.0A AC,DC
- ●Withstand Voltage:800V AC/minute
- ●Insulation Resistance:1000MΩ min
- ●Temperature Range:-25℃~+85℃

■Housing
- ●Material:PA66 UL94-V0/V2
- ●Color:White

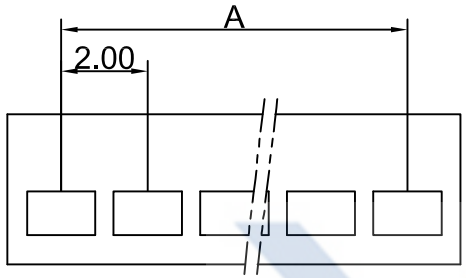

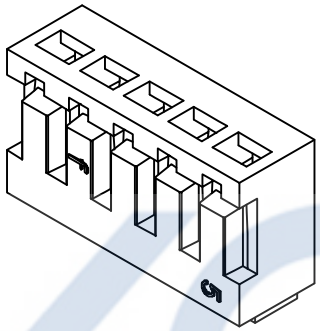

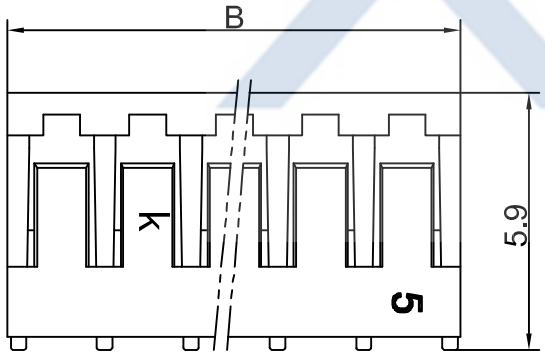

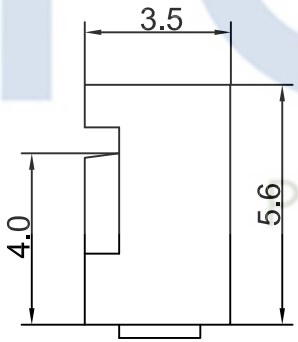

Poles	Dimensions	
	A	B
2	2. 00	4. 5
3	4. 00	6. 5
4	6. 00	8. 5
5	8. 00	10. 5
6	10. 00	12. 5
7	12. 00	14. 5
8	14. 00	16. 5
9	16. 00	18. 5
10	18. 00	20. 5
11	20. 00	22. 5
12	22. 00	24. 5
13	24. 00	26. 5
14	26. 00	28. 5
15	28. 00	30. 5
16	30. 00	32. 5

XYCO Precision Connectors

DATE 日期	VER 版本	CHANGE HISTORY 變更歷史	CHANGED NAME 修改後料號	DRAWING 變更者
2015-09-20	A		KB9314-XXH3A	John

TOLERANCE 公 差: .X=±0.30, .XX=±0.20, .XXX=±0.10

DRAWING 設計者: John
CHECKED 審查: Thomas
APPROVED 核准: William

KB9314-XXH3A

PART NO. 料號
DWG NO. 圖號: PE1807042A

UNIT 單位: mm

PRODUCT NAME 產品名稱: JC20-NY Wire To Board Housing

XYCO PRECISION CONNECTORS
TEL: 0769-8297 9981/2/3 http://www.XYCO.com.cn