DRAWING FOR CUSTOMER

KB501-XX X S R X A

- Pin No.
- 包装方式：
  T:TUBE（管装）
  R:REEL（卷装）
  P：PE （袋装）
- S:SMT / D:DIP
- R:Right Angle / V:Vertical
- Mold No.
- Version

■Material and finish
- ●Housing:LCP UL94V-0
- ●Terminal:Copper alloy T=0.15mm
  Plating:contact area Gold 5u"min.
  solder area bright Tin 75-150u".
  overall with 50-150u"Nickel under plated.
- ●Shell:Stainless Steel,T=0.15mm
  Plating:solder area plated with Gold 4u"min.
  overall Nickel 10u"-50u"under plated.
- ●Ground:Copper alloy,T=0.15mm
  Plating:brighe Tin 100u"-250u".
  overall Nickel 50u"-150u"under plated.

■QTY.:4KPCS/RELL

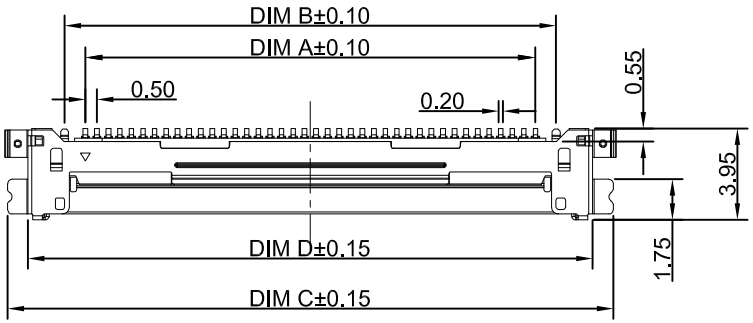

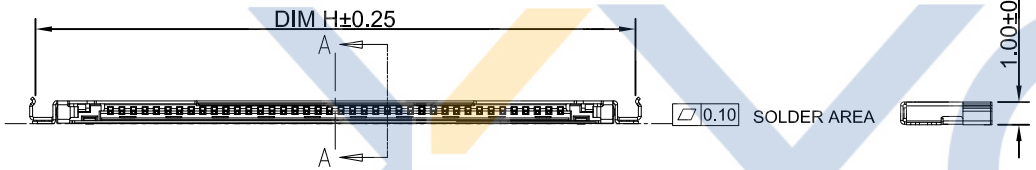

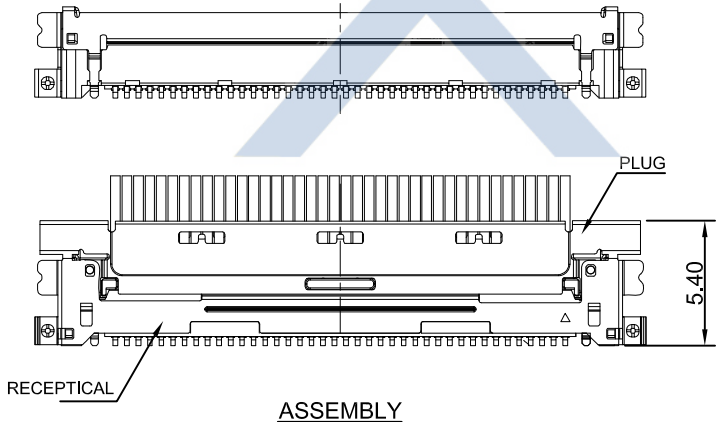

ASSEMBLY

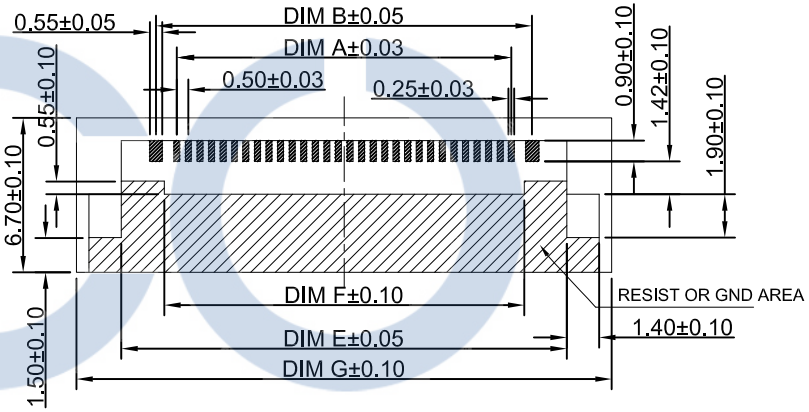

Applicable PCB dimensions

Precision Connectors

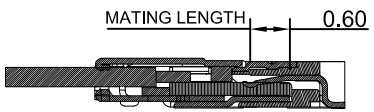

MATED CONDITION

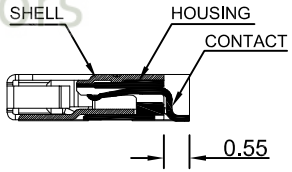

SECTION A-A
SCALE 2:1

PART NO.	PIN NO.	A	B	C	D	E	F	G	H
KB501-30XSR2A	30	14.50	16.30	21.25	19.47	19.30	15.60	23.20	21.00
KB501-40XSR2A	40	19.50	21.30	26.25	24.47	24.30	20.60	28.20	26.00

DATE 日期	VER 版本	CHANGE HISTORY 變更歷史	CHANGED NAME 修改後料號	DRAWING 變更者
2013-03-04	A		KB501-XXXSRXA	譚火秦

TOLERANCE 公 差: .X=±0.30, .XX=±0.20, .XXX=±0.10

DRAWING 設計者: 譚火秦
CHECKED 審查: 杨峰
APPROVED 核准: 譚宏

KB501-XXXSRXA

PART NO. 料號

DWG NO. 圖號: PE0907A

UNIT 單位: mm

PRODUCT NAME 產品名稱: I-PEX-20454 PH0.5mm Wire To Board SMT Right Angle Wafer

XYCO PRECISION CONNECTORS
TEL: 0769-8297 9981/2/3 http://www.XYCO.com.cn