DRAWING FOR CUSTOMER

KB911- X X H 3 A

Pin No. — Housing — Mold No. — Version

■SPEC.:
- ●Rated Voltage:150V AC,DC
- ●Rated Current:1A AC,DC
- ●Withstand Voltage:300V AC/minute
- ●Contact Resistance:30mΩ max
- ●Insulation Resistance:500MΩ min
- ●Temperature Range:-40℃~+85℃
- ●Applicable wire:AWG#28~32

■Housing
- ●Material:PA66 UL94-V0

Color:Beige

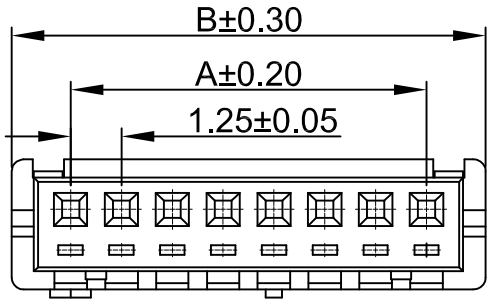

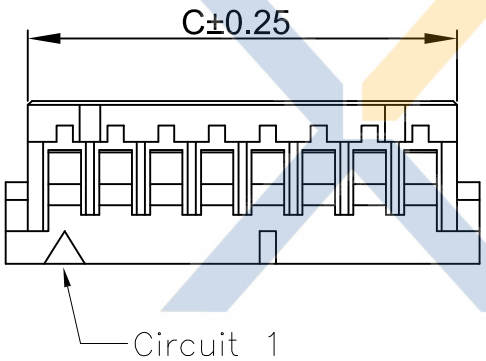

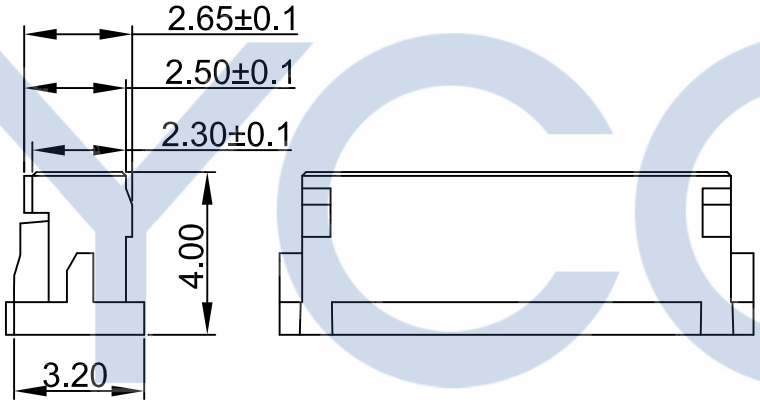

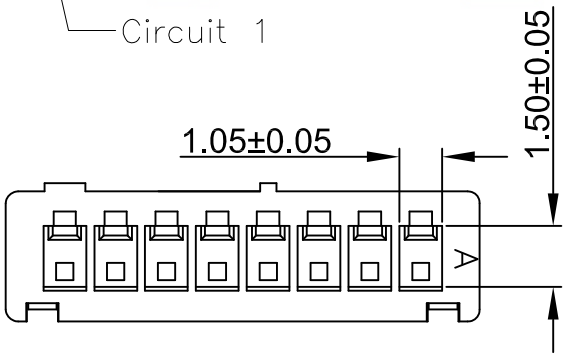

Cir-Cuits	Dimension		
	A	B	C
2P	1.25	4.15	3.05
3P	2.50	5.40	4.30
4P	3.75	6.65	5.55
5P	5.00	7.90	6.80
6P	6.25	9.15	8.05
7P	7.50	10.40	9.30
8P	8.75	11.65	10.55
9P	10.00	12.90	11.80
10P	11.25	14.15	13.05
11P	12.50	15.40	14.30
12P	13.75	16.65	15.55
13P	15.00	17.90	16.80
14P	16.25	19.15	18.05
15P	17.50	20.40	19.30

XYCO Precision Connectors

DATE 日期	VER 版本	CHANGE HISTORY 變更歷史	CHANGED NAME 修改後料號	DRAWING 變更者
2013-09-23	A		KB911-XXH3A	John

TOLERANCE 公 差: .X=±0.30, .XX=±0.20, .XXX=±0.10

DRAWING 設計者: John
CHECKED 審查: Thomas
APPROVED 核准: William

KB911-XXH3A

PART NO. 料號

DWG NO. 圖號: PE2801A

UNIT 單位: mm

PRODUCT NAME 產品名稱: HRS DF13 PH1.25mm Wire To Board Housing

XYCO PRECISION CONNECTORS
TEL: 0769-8297 9981/2/3 http://www.XYCO.com.cn